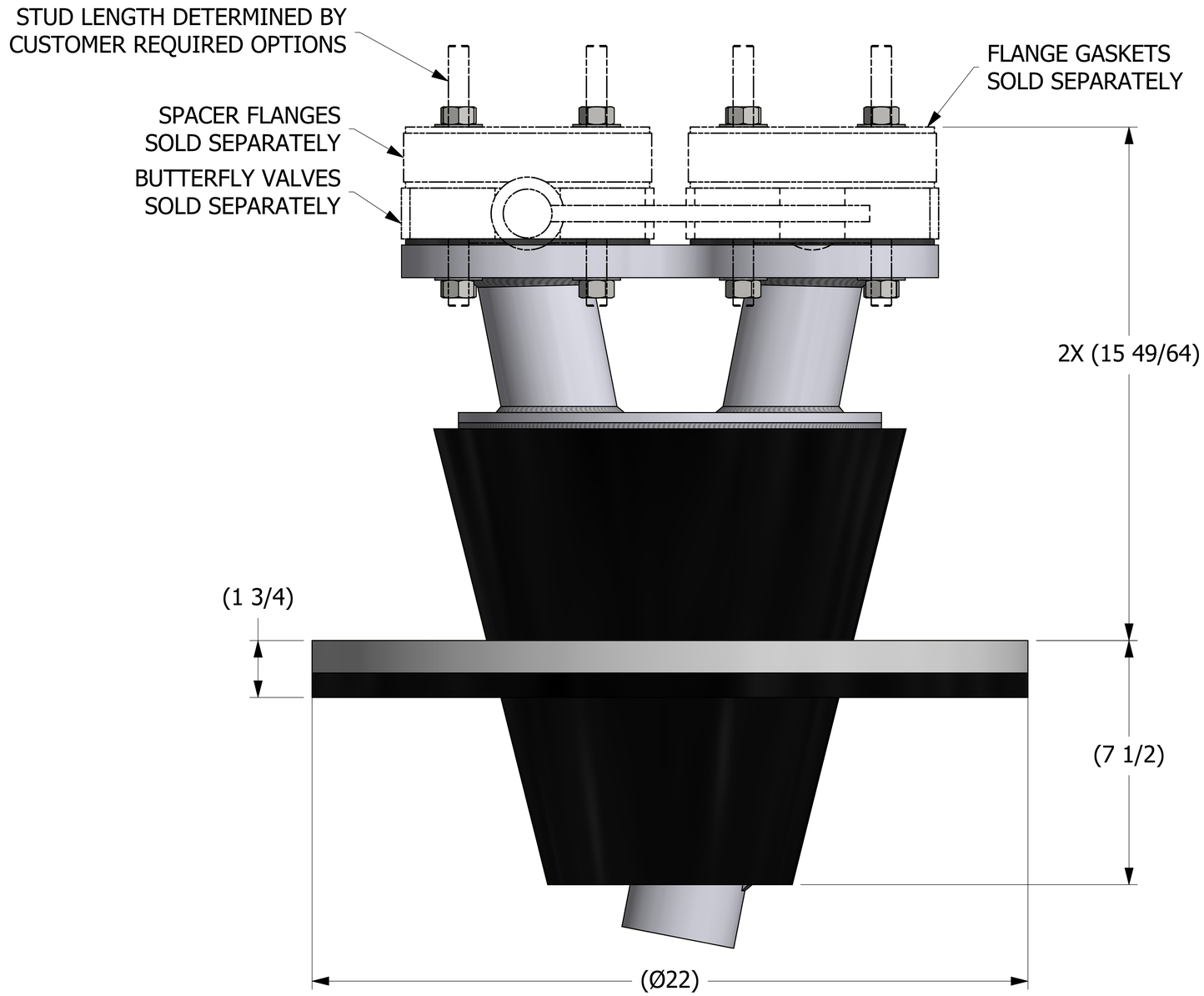

NOTE:
GASKET MATERIAL IS BLACK EPDM
PEROXIDE CURED DUROMETER 55-80.

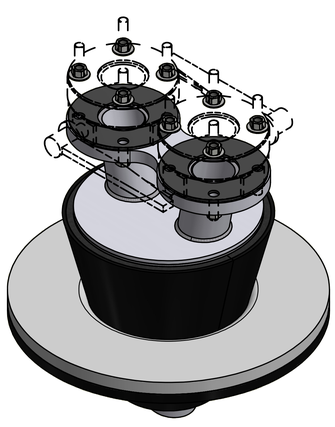

ISOMETRIC VIEW

SALES DRAWING SALES DRAWING

REV	BY	DATE	DESCRIPTION
E	DGP	10-27-17	REMOVED (4) FG2315029, HSSF32457, STUD588SS UPDATED NOTES & BOM
D	DGP	03-07-16	REMOVED (2) HW-BY110300EL, ADDED (4) FG2315029 & UPDATED NOTES
C	TAK	1-7-13	UPDATED TITLE BLOCK & CHANGED THE ORIENTATION OF THE BUTTERFLY VALVES
B	MCH	6-28-12	ADDED SPACER FLANGE & FG2315029 REPLACED STUD586SS WITH STUD588SS
A	BG	6-14-12	NEW PART ADDED TO THE NETWORK

UNLESS OTHERWISE SPECIFIED
DIMENSIONAL TOLERANCES
FRACTIONAL: ±1/16
X.XX: ±.03
X.XXX: ±.015
ANGULAR: ±1°
DEBURR ALL SHARP EDGES.
ALL MACHINED SURFACES TO
HAVE A 125 RMS FINISH UNLESS
NOTED OTHERWISE.
THIRD ANGLE PROJECTION

DRAWN BY:	TAK
CHECKED BY:	CHL
PROTOTYPE BY:	TAK
PROTOTYPE DATE:	4/23/2012
APPROVED FOR PRODUCTION BY:	CHL
PRODUCTION DATE:	6/14/2012

SALCO PRODUCTS, INC.

PART NAME: LOADING SPOUT ASSEMBLY

MATERIAL: SALCO PE/PP/EPDM/PVC/SS

PROJECT #: 031212AO | SHEET #: 1 OF 1 | SCALE: 2:3

DRAWING #: E33065 | PART #: HSCSLS1813A03

THIS PRINT, PROPERTY OF SALCO PRODUCTS INC, CONTAINS PROPRIETARY INFORMATION
AND MUST NOT BE COPIED, REPRODUCED, OR USED DETRIMENTALLY TO OUR INTEREST.

SALES DRAWING SALES DRAWING